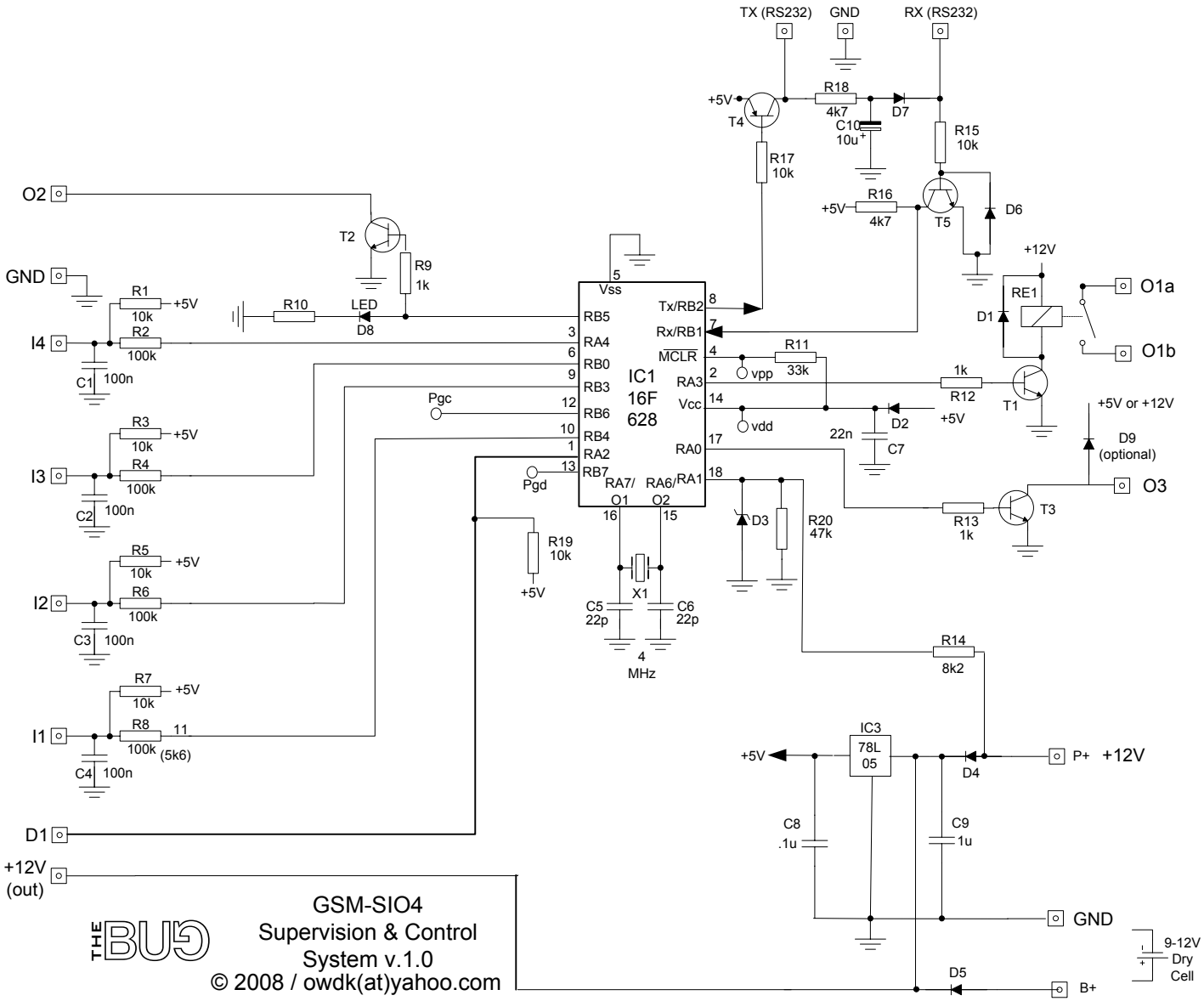
TX (RS232)
GND
RX (RS232)
+5V
T4
R18
4k7
D7
C10
10u
R15
10k
R17
10k
R16
4k7
T5
D6
+12V
RE1
D1
O1a
O1b
O2
T2
R9
1k
GND
R1
10k
+5V
R10
LED
D8
I4
R2
100k
C1
100n
R3
10k
+5V
I3
R4
100k
C2
100n
R5
10k
+5V
I2
R6
100k
C3
100n
R7
10k
+5V
I1
R8
100k
(5k6)
C4
100n
D1
+12V
(out)
Vss
Tx/RB2
Rx/RB1
MCLR
RB5
RA4
RB0
RB3
RB6
RB4
RA2
RB7
RA3
Vcc
RA0
RA7/
O1
RA6/RA1
O2
IC1
16F
628
Pgc
Pgd
vpp
vdd
R11
33k
1k
R12
T1
22n
D2
C7
+5V or +12V
D9
(optional)
O3
R13
1k
T3
D3
R20
47k
R19
10k
+5V
X1
C5
22p
C6
22p
4
MHz
R14
8k2
IC3
78L
05
+5V
D4
P+
+12V
C8
.1u
C9
1u
GND
9-12V
Dry
Cell
D5
B+
THE BUG
GSM-SIO4
Supervision & Control
System v.1.0
© 2008 / owdk(at)yahoo.com